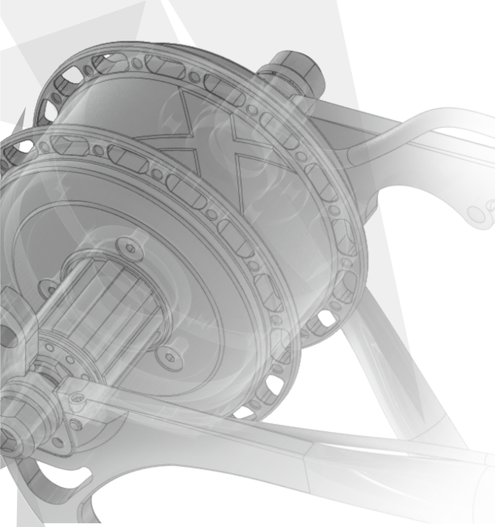

ebikemotion®

The B2B Connected Bicycle Platform

유지 관리 X35 시스템

Quick Use Guide

ebm bikes

EBIKEMOTION TECHNOLOGIES S. L.
C/ Orfebres, 10 - 34004
(Palencia, Spain)

ebikemotion.com

EBMDOC13-A1

V.1.0

1 보조출력장치와 라이트 / AUX & LIGHTS / ACCESORIOS Y LUCES / AUX UND LICHT / ACCESSOIRES ET LUMIÈRES / ACCESSORI E LUCI / ACESSÓRIOS E LUZES

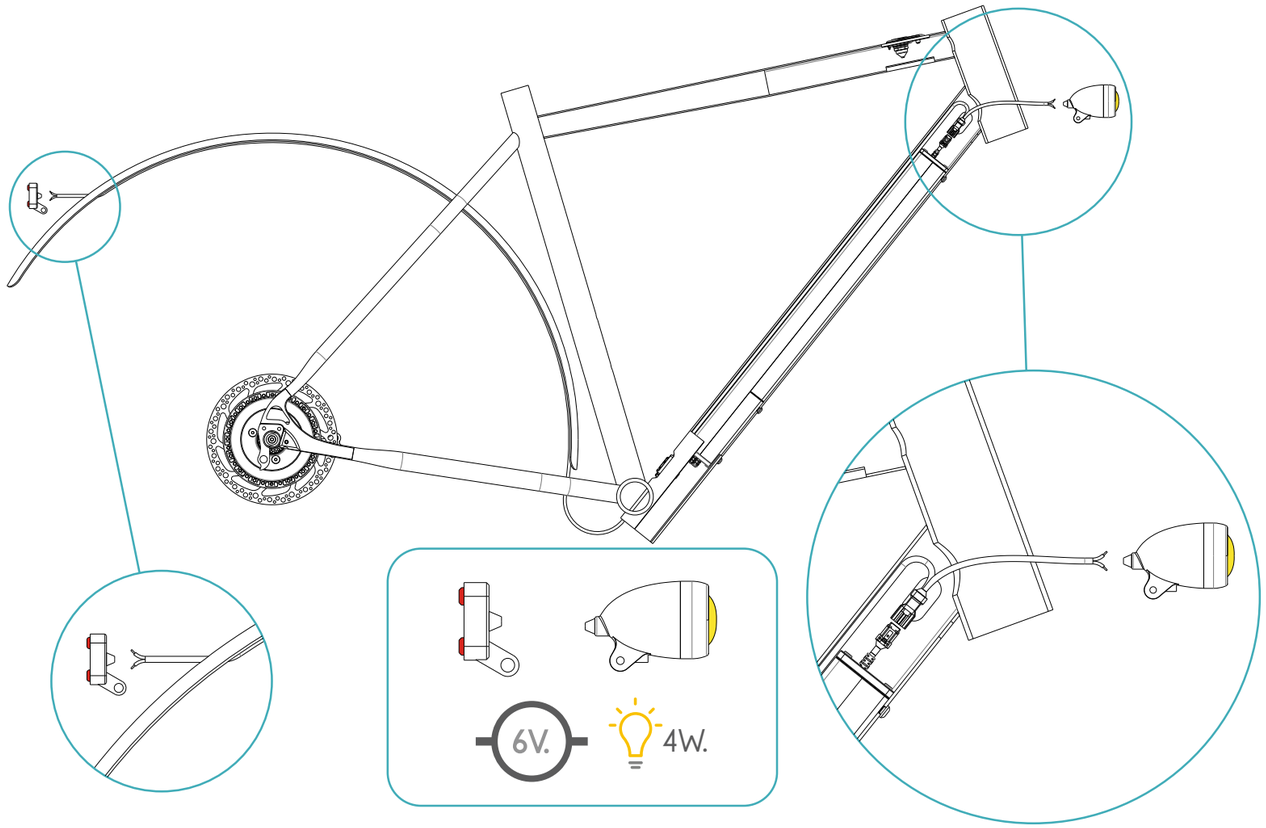

[X35 L3 케이블] 옵션1

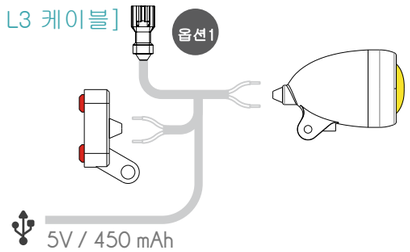

[X35 L2 케이블] 옵션2

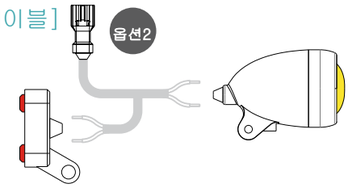

[X35 L1 케이블] 옵션3

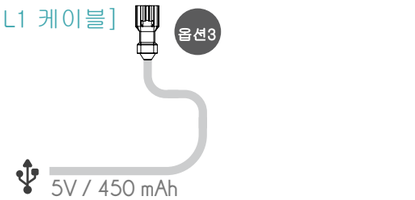

2 배터리 , 케이블 , 충전기 / BATTERY, WIRES & CHARGER / BATERIA, CABLEADO Y CARGADOR / BATTERIE, KABEL UND LADEGERÄT / BATTERIE ET CHARGEUR / BATTERIA, CAVI E CARICABATTERIA / BATERIA, CABOS E CARREGADOR

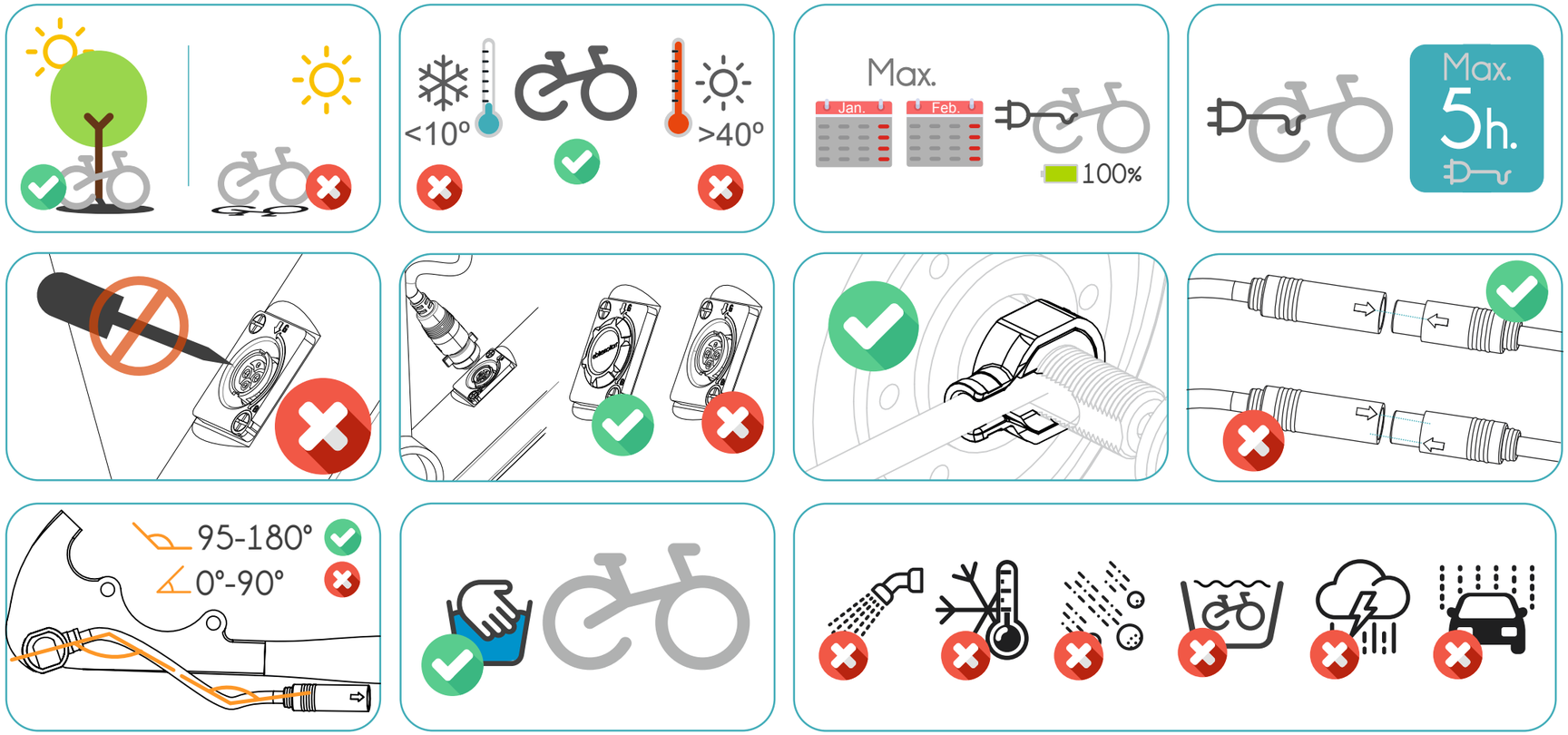

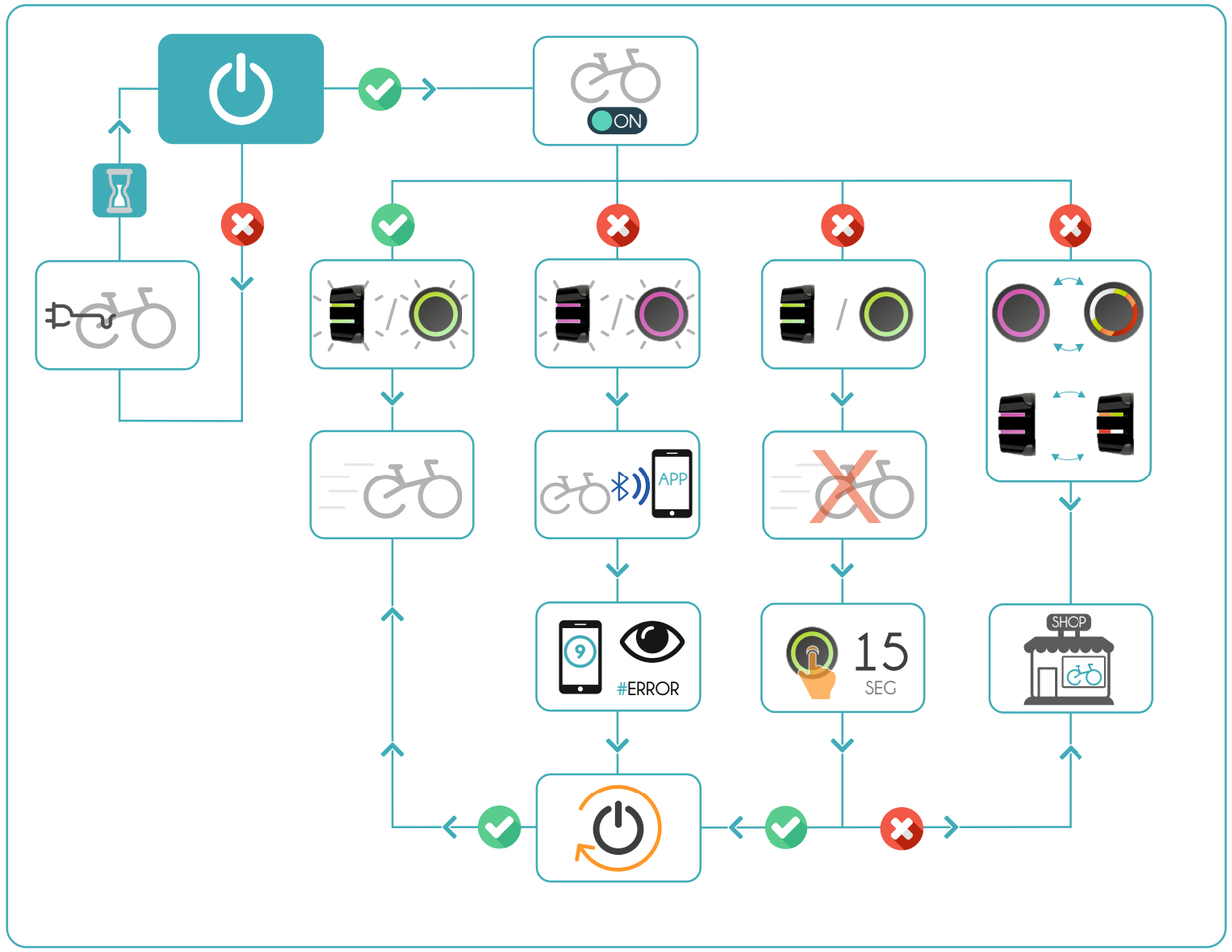
ON
APP
#ERROR
15
SEG
SHOP

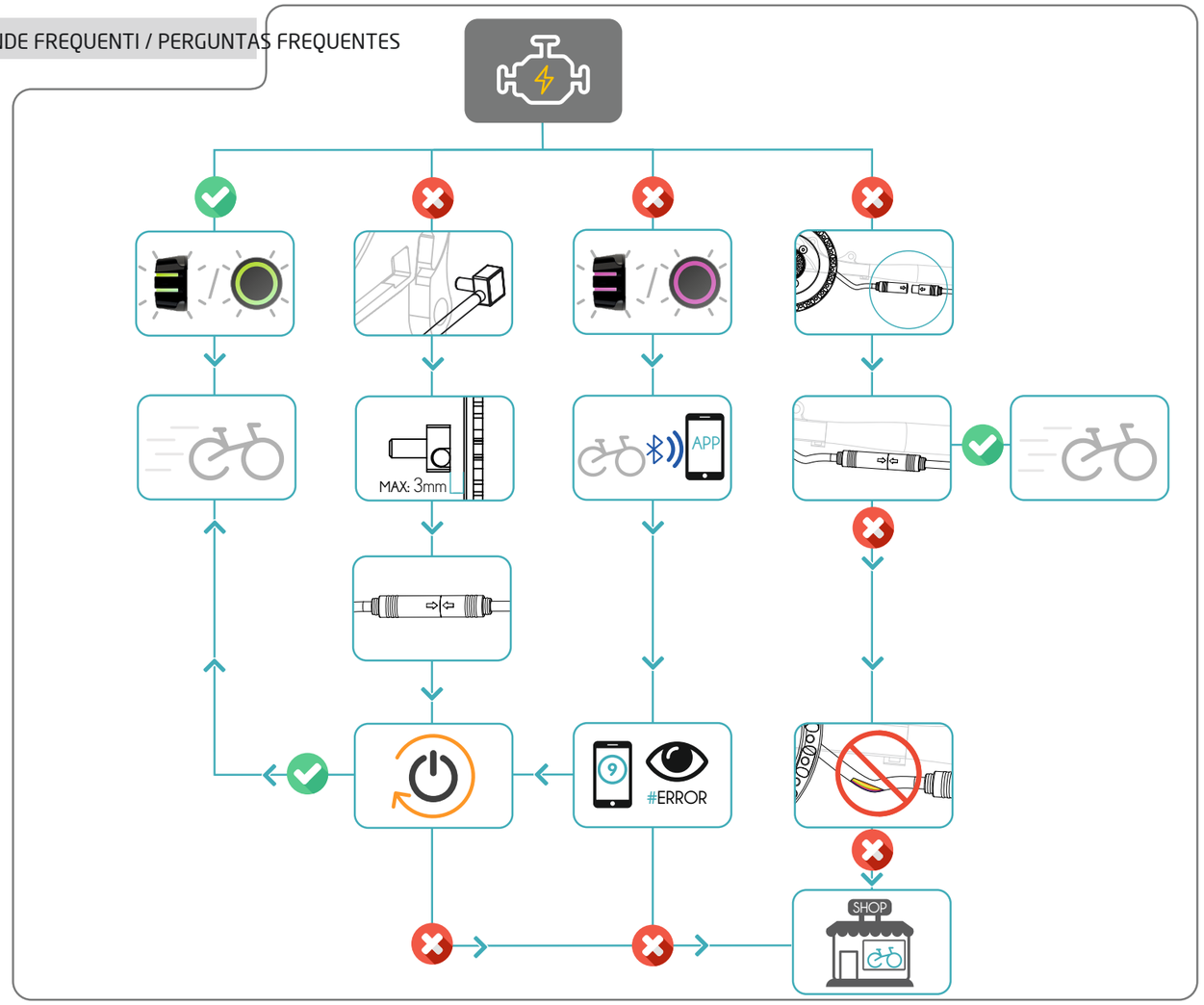
MAX: 3mm
APP
#ERROR
SHOP

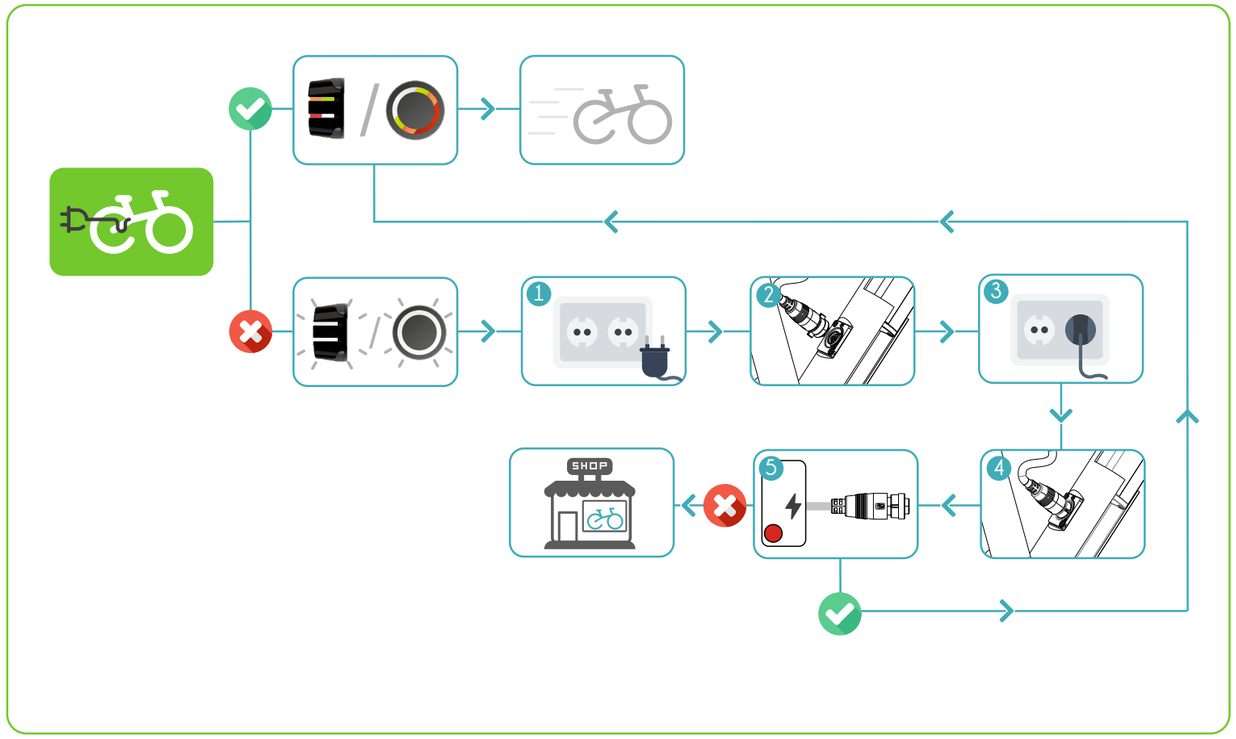
1
2
3
4
5
SHOP

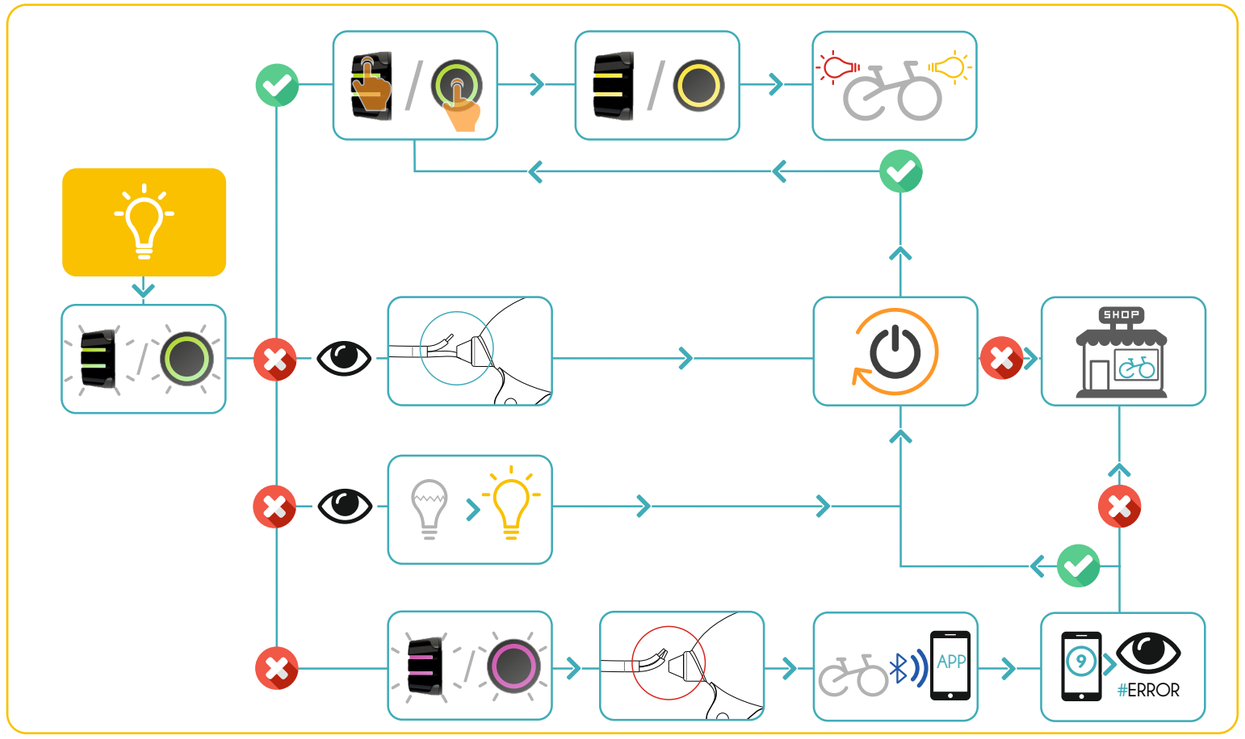
SHOP
APP
#ERROR